MEGADYNE

MEGASYNC™ RUBBER TIMING BELTS

EN

PRODUCT BROCHURE

WELCOME TO
MEGADYNE

Megadyne offers a full line of power transmission belting solutions for industrial distribution and original equipment manufacturers (OEMs). We are a global product brand, leader in rubber and polyurethane synchronous belts, engineered belts and V-belts.

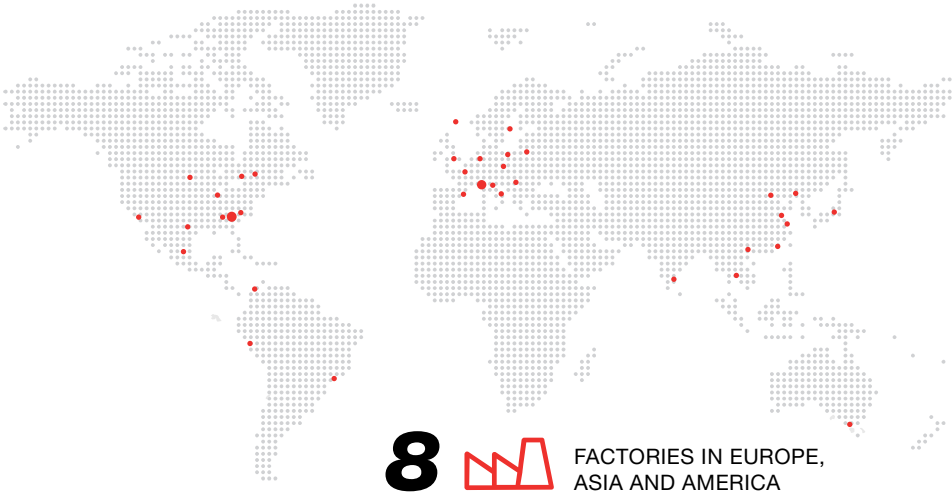

8 FACTORIES IN EUROPE, ASIA AND AMERICA

+170 COMMERCIAL LOCATIONS

OUR SOLUTIONS

Our customers are original equipment manufacturers and aftermarket distributors, for whom we deliver a large range of products. Our offering includes thermoset and thermoplastic polyurethane belts, rubber timing and V-belts, flat belts, multi-rib belts, specialty belts, pulleys, clamping plates, timing bars and complementary products, including custom-made.

ENERGY EFFICIENT BELT DRIVES

Synchronous belts provide a 98% drive efficiency over heavy-duty classical belts which on average afford 92% efficiency. Therefore, upgrading to synchronous belts is a “Best Practice” in reducing energy consumption.

FOR MORE INFORMATION AND OUR FULL PRODUCT RANGE, PLEASE SCAN BELOW:

MEGASYNC™ TITANIUM

ULTRA HIGH-TORQUE

MEGADYNE MEGASYNC Titanium

Megadyne introduces one of the highest power density synchronous power transmission belts on the market! The next generation of synchronous belts surpassing the Platinum and other premium belt drives on the market today. When you want to replace chains, gears or you need to provide a superior belt drive solution - you need MEGADYNE MEGASYNC™ Titanium. With an enhanced design and innovative materials, Titanium has all the features and performance to make it the ideal belting solution in the most demanding applications.

PERFORMANCE:

The RPC profile achieves a high-power capacity drive with excellent dimensional stability and a fully-functional interchange with all of the most common existing deep pulley tooth profile systems, including HTD, RPP and PCGT profiles.

FEATURES & BENEFITS:

- Tooth Pitch Codes: TTM8 and TTM14
- Compound: HNBR rubber
- Cord: 100% Carbon Fiber
- Tooth Facing: High performance fabric with special anti-friction treatment
- Operating Temperatures: -40 °C up to +120 °C (Max peak: +140 °C)
- Antistatic, according to ISO 9563
- Available in any width

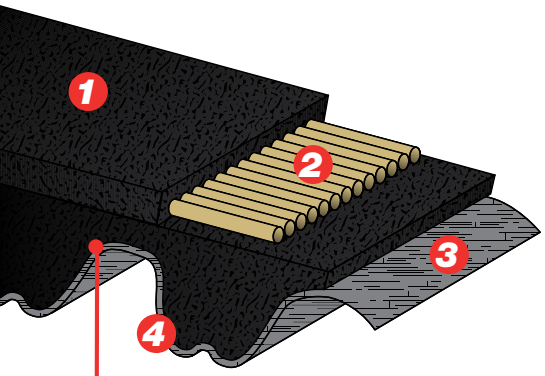

The MEGASYNC™ Titanium belt is made with the most innovative materials of the highest quality. The extensive development and tests performed have resulted in a synchronous belt that has:

1. **COMPOUND**
   HNBR rubber
2. **CORD**
   100% carbon fiber
3. **TOOTH FACING**
   High performance fabric with special anti-friction treatment
4. **TOOTH PROFILE**
   RPC

PART NOMENCLATURE:

3500TTM14M65

3500 = Pitch length (mm)
TTM = Titanium
14M = Tooth pitch (14mm)
65 = Belt width (mm)

DURABILITY TEST - TITANIUM VS COMPETITORS

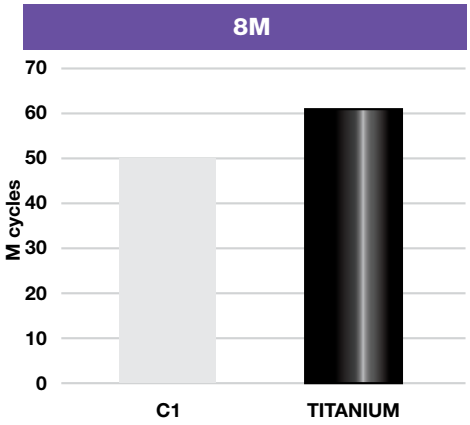

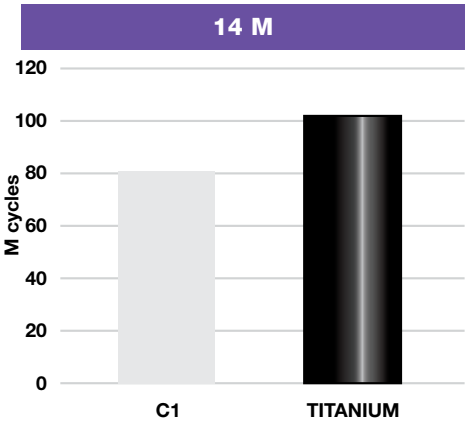

Legend: C1 = Competitor 1

MEGASYNC™ GOLD2

SUPER HIGH-TORQUE

MEGADYNE MEGASYNC Gold2

MEGASYNC™ Gold2 has been developed to provide a more powerful version of RPP and Silver belts. It is suitable for a very wide range of applications in power transmission. This type of belt combines the advantages of gears and roller chain drives, minimizing the drawbacks of both.

Most of Gold2 belts feature the RPC profile, designed also to be interchangeable with existing deep groove profiles and to run on pulleys according to ISO 13050.
(Check the MEGASYNC™ technical manual for detailed information)

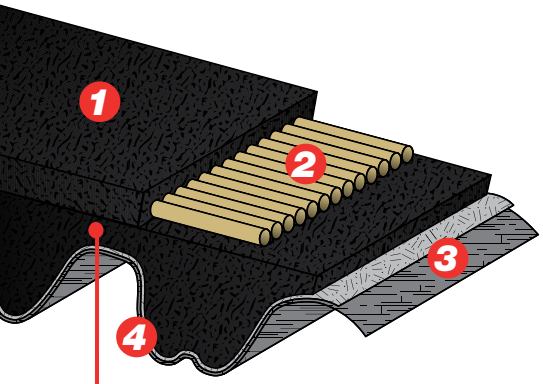

The MEGASYNC™ Gold2 belt is made with premium materials. The extensive development and tests performed have resulted in a synchronous belt that has:

1. **COMPOUND**
High-performance NBR

2. **CORD**
High-performance Fiberglass

3. **TOOTH FACING**
Dual layer nylon (for 14M) and single layer nylon (for 8M): self-lubricating, low friction, extended life

4. **TOOTH PROFILE**
RPC

FEATURES & BENEFITS:

- Tooth Pitch Code: GLD2 5M, GLD2 8M and GLD2 14M
- RPC tooth profile, known for its low-noise characteristics
- Cord: Higher power capacity Fiberglass Cords with excellent dimensional stability
- Compound: high-performance compound gives oil and heat resistance
- Tooth Cover: impregnated fabric coated with a film provides low friction and durability
- Antistatic properties: conforms to ISO 9563 (BS 2050) standard
- Operating temperatures: -25 °C up to +100 °C
- Available in any width
- On demand: GLD2 8M DD and GLD2 14M DD (Dual-Sided, RPP profile)

PART NOMENCLATURE:

1800GLD2-8M50

1800 = Pitch length (mm)
GLD2 = Gold2
8M = Tooth pitch (8mm)
50 = Belt width (mm)

DURABILITY TEST - GOLD2 VS COMPETITORS

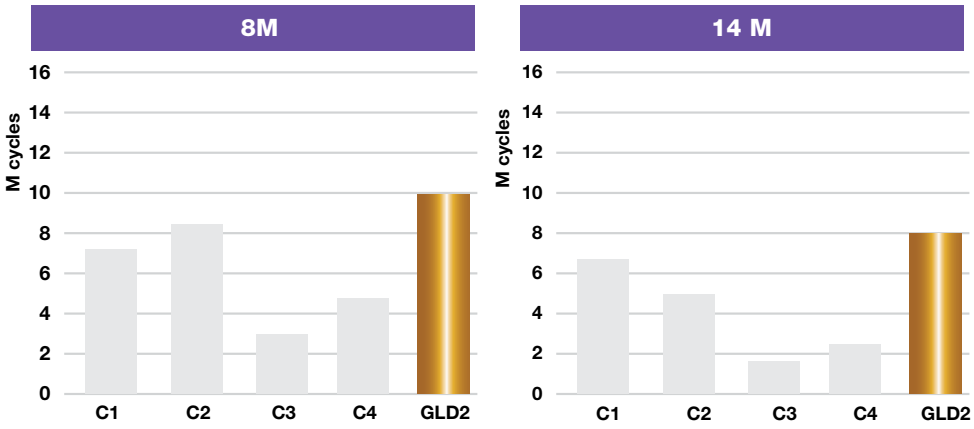

Legend: C1 = Competitor 1; C2 = Competitor 2; C3 = Competitor 3

MEGASYNC™ SILVER3

EXTRA HIGH-TORQUE

MEGADYNE MEGASYNC Silver3

MEGASYNC™ Silver3 offers a higher power rating up to +20% over the former Silver and Silver2 belt range and a wealth of improved properties at the same price. Most of Silver3 has an RPC* tooth profile, giving full functional interchangeability with other deep profile systems. The existing RPP or Silver and Silver2 systems can be upgraded without replacing the pulleys. In addition, due to improved performance, the more compact dimension optimises space utilisation and cost for all new drive systems.

(*Check the MEGASYNC™ technical manual for detailed information)

FEATURES & BENEFITS:

- Tooth Pitch Code: SLV3 5M, SLV3 8M and SLV3 14M
- RPC tooth profile, known for its low-noise characteristics
- Cord: Increased load capacity over previous Silver/Silver2 construction
- Tooth Cover: impregnated fabric coated with a film provides low friction and durability
- Upgrades drive capacity with existing sprockets
- Antistatic properties: conforms to ISO 9563 (BS 2050) standard
- Operating temperatures: -25 °C up to +100 °C
- Available in any width
- SLV3 8M DD on stock, SLV3 14M DD on demand (Double-sided, with RPP profile)

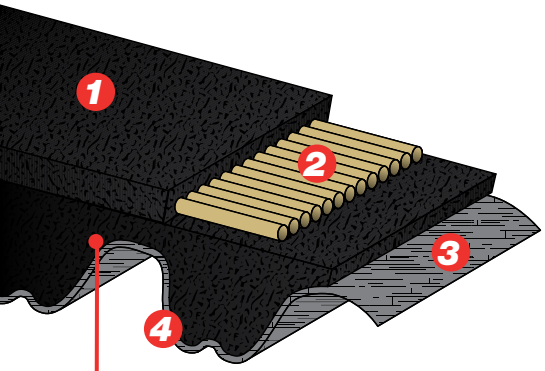

The MEGASYNC™ Silver3 belt is made with premium materials. The extensive development and tests performed have resulted in a synchronous belt that has:

1. **COMPOUND**
   Fiber loaded nitrile
2. **CORD**
   Fiberglass
3. **TOOTH FACING**
   Nylon Fabric: self-lubricating, low friction, extended life
4. **TOOTH PROFILE**
   RPC

PART NOMENCLATURE:

1800SLV3-8M50

1800 = Pitch length (mm)
SLV3 = Silver3
8M = Tooth Pitch (8mm)
50 = Belt width (mm)

DURABILITY TEST - SILVER3 VS COMPETITORS

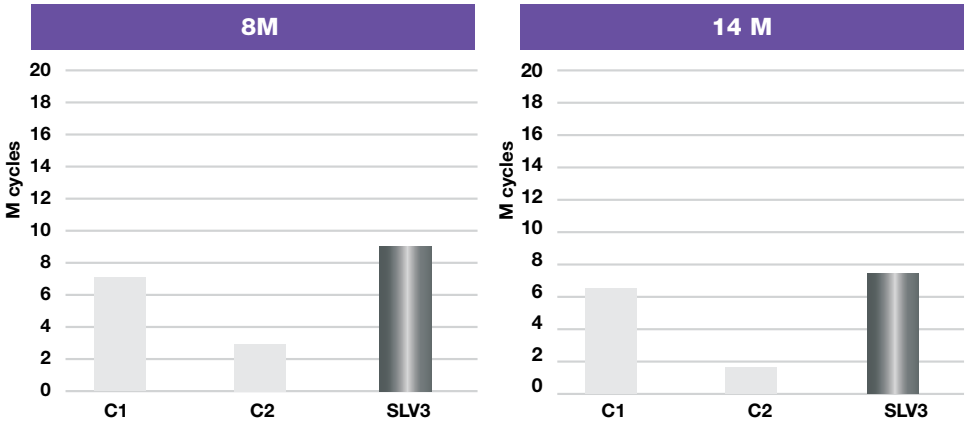

Legend: C1 = Competitor 1; C2 = Competitor 2; C3 = Competitor 3

MEGASYNC™
RUBBER TIMING BELTS

MEGASYNC™ RPP

HIGH-TORQUE

FEATURES & BENEFITS:

- Tooth Pitch Codes: RPP3, RPP5, RPP8, and RPP14
- Compound: Chloroprene
- Cord: Fiberglass
- Tooth Cover: Nylon
- Tooth Profile: RPP - HTB available on request
- Operating Temperatures: -25 °C up to +80 °C
- Available in any width

STANDARD TIMING BELTS

TRAPEZOIDAL TOOTH

FEATURES & BENEFITS:

- Tooth Pitch Codes: MXL, XL, L, H, XH, XXH
- Compound: Chloroprene
- Cord: Fiberglass
- Tooth Cover: Nylon
- Tooth Profile: Trapezoidal
- Operating Temperatures: -25 °C up to +80 °C
- Available in any width

PERFORMANCE

WIDTH INDEX

Higher performance belt = narrower drive

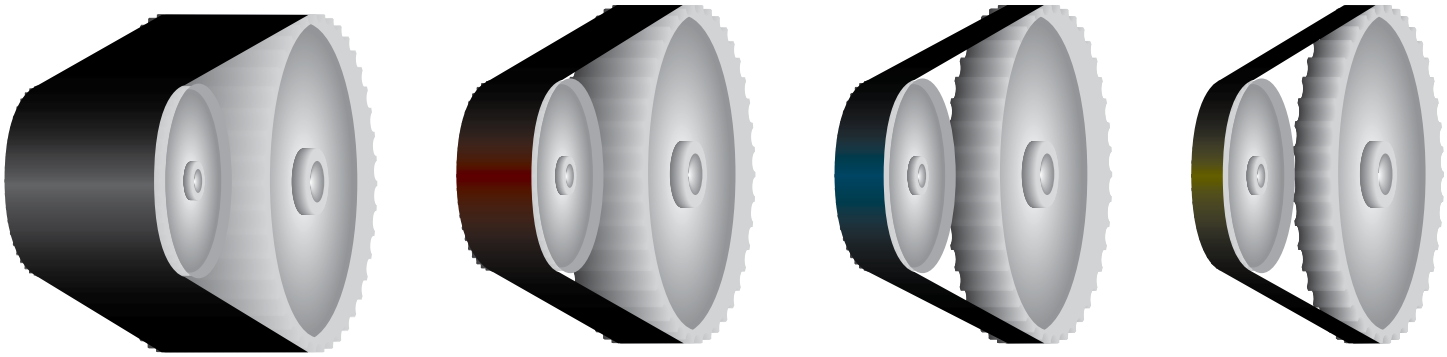

RPP	MEGADYNE MEGASYNC Silver3	MEGADYNE MEGASYNC Gold2	MEGADYNE MEGASYNC Titanium
HIGH TORQUE	**EXTRA-HIGH TORQUE**	**SUPER-HIGH TORQUE**	**ULTRA-HIGH TORQUE**

Drives pictured above are for demonstration purposes only. From left to right, MEGADYNE MEGASYNC™ RPP to Titanium conveys a reduction in total drive cost: belts, sprockets, weight and bearing hub load, plus more efficiency, lower noise and less energy consumption.

PERFORMANCE

COMPARISON INDEX

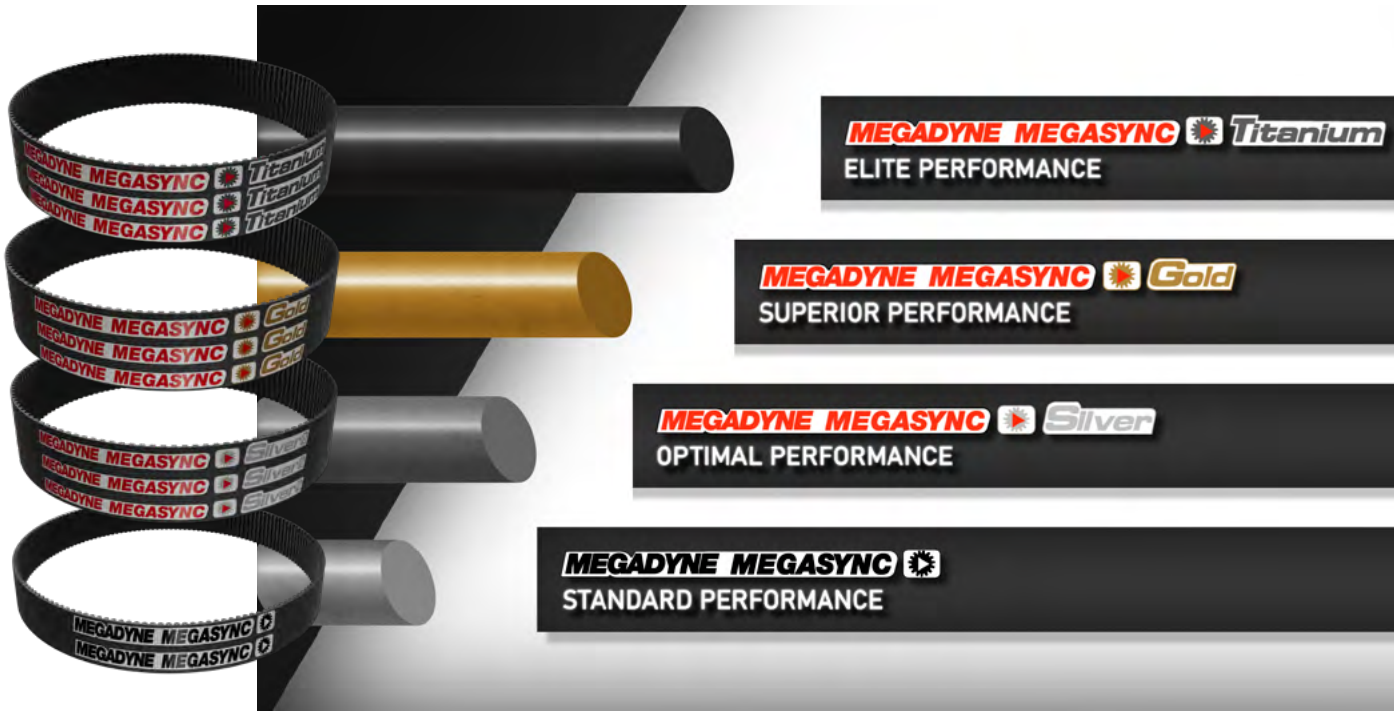

This image illustrates a power comparison of belts that are equal width. MEGASYNC™ Titanium belts are up to 6x the rated horse power capacity of standard RPP belts. The above examples are for illustrative purposes only.

MEGADYNE

Discover Your Local Contacts

The local partner of choice
for sustainable power transmission belting solutions
around the globe.

General contact information:

Megadyne
Via Trieste, 16
Via S. Lucia 114 - 10075 Mathi (Torino)
Italy

www.megadynegroup.com

Scan the QR code
and find your local
contact

AMMEGA

Activities performed and services rendered by a company of the AMMEGA Group are governed by the general terms and conditions of sale and delivery, as applied from time to time by the relevant company of the AMMEGA Group.

02.2026